Sequential Logic Design

Sequential logic circuit → Whose output depends not only on the present value of its input signals but on the sequence of past inputs.

Classification

1. Synchronous → In which the changes in the state of memory elements are synchronized by a clock signal.

Example: Electronic oscillator, Calculators, Cell Phones.

2. Asynchronous → These circuits depends upon the order in which its input signals change and can be affected any instant of time.

Example: Time delay devices

An asynchronous sequential circuit may be regarded as a combinational circuit with feedback among logic gates, an asynchronous sequential circuits may at times become unstable. The instability problem imposes many difficulties on the designer. Hence they are not commonly used as synchronous systems.

Block diagram of a sequential circuit.

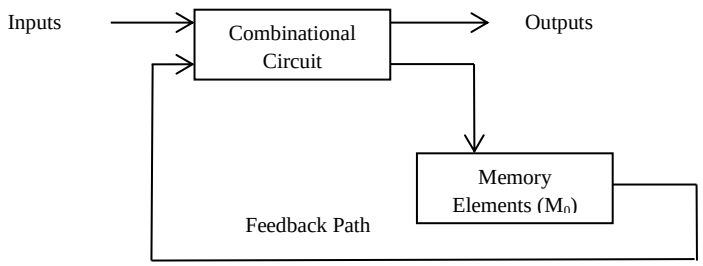

A feedback path is required for the circuit to have memory. The (M_0) memory elements themselves are also sequential circuits.

Bi-stable element

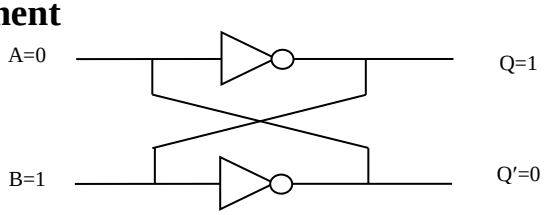

Output value of the each gate is stable, but what value will it be? There is no way to predict of we could predict or set the value we would have a simple 1-bit memory element.

Latch [Event Driven]

These are binary cells capable of storing one bit of information. This circuit has two outputs, one for the normal value and one for the complement value of the bit stored in it. Analog equivalence of latch is bi-stable multivibrator.

1. Basic SR Latch with NAND gates

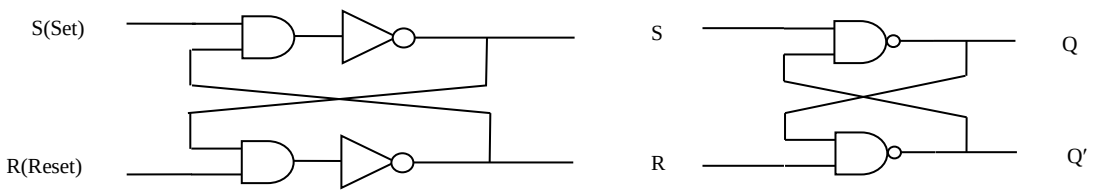

Function Table

S	R	Q	Q
1	0	0	1
0	0	1	1
0	1	1	0
1	1	1	0
1	0	0	1
1	1	1	0
0	0	1	1

Functional Table

S	R	Q	Q
0	0	Invalid	
0	1	1	0
1	0	0	1
1	1	Memory	

2. Basic SR Latch with NOR gates

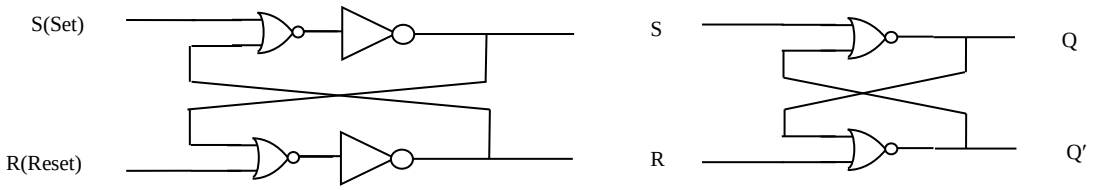

Function Table

S	R	Q	Q′
1	0	0	1
0	0	1	1
0	1	1	0
1	1	1	0
1	0	0	1
1	1	1	0
0	0	1	1

Functional Table

S	R	Q	Q′
0	0	Invalid	
0	1	1	0
1	0	0	1
1	1	Memory	

Drawbacks

1. Abruptly inputs are changing, there is no way to predict when the input is going to change. Output change immediately in response to changes in the inputs. So unable to predict the what output value will we get. So can't construct a simple memory element.

3. Gated SR Latch [clock driven)

The modification we are going to look at is adding an enable input to our SR latch. A clock signal is acting as gate. It controls the timing of changes in input.

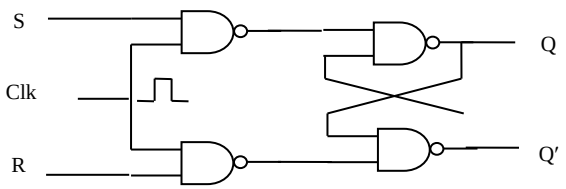

Characteristic Table

Q	S	R	Q_{n+1}
0	0	0	0
0	0	1	0
0	1	0	1
0	1	1	X
1	0	0	1
1	0	1	0
1	1	0	1
1	1	1	X

Functional Table

Clk	S	R	Q	Q′
0	0	0	Memory	
1	0	0	Memory	
1	0	1	0	1
1	1	0	1	0
1	1	1	Invalid	

Characteristic Equation

x \ yz	00	01	11	10
0			x	1
1	1		x	1

$Q_{n+1} = S + QR'$

Exitation Table

Q	Q_{n+1}	S	R
0	0	0	X
0	1	1	0
1	0	0	1
1	1	X	0

4. Gated D Latch

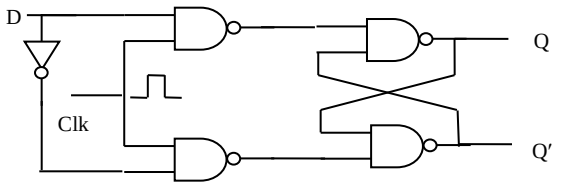

Functional Table

Clk	D	Q	Q′
1	0	0	1
1	1	1	0

Characteristic Table

Q	D	Q_{n+1}
0	0	0
0	1	1
1	0	0
1	1	1

Characteristic Function

Q \ D	0	1
0		1
1		1

$\mathbf{Q_{n+1} = D}$

Exitation Table

Q	Q_{n+1}	D
0	0	0
0	1	1
1	0	0
1	1	1

$\mathbf{D = Q_{n+1}}$

5. Gated JK Latch

To avoid the invalid / forbidden input states of the gated SR latch even when S & R are both at logic "1" the gated JK latch is designed.

- Jack & Kilby who invented this latch combination. (JK)

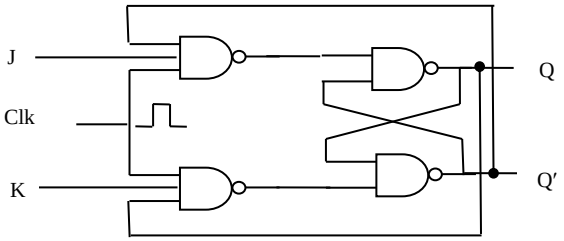

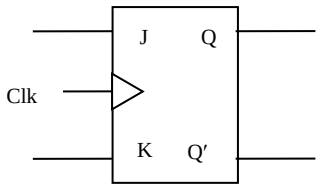

Functional Table

Clk	S	R	Q	Q
0	0	0	Memory	
1	0	0	Memory	
1	0	1	0	1
1	1	0	1	0
1	1	1	Toggle	

Characteristic Table

Q	J	K	Q_{n+1}
0	0	0	0
0	0	1	0
0	1	0	1
0	1	1	1
1	0	0	1
1	0	1	0
1	1	0	1
1	1	1	0

Exitation Table

Q	Q_{n+1}	J	K
0	0	0	X
0	1	1	X
1	0	X	1
1	1	X	0

Timing Diagram

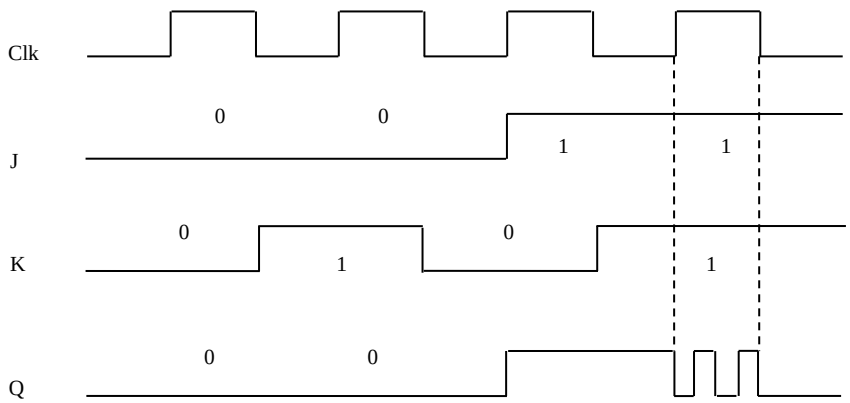

Drawbacks

1. The problem called race around condition occurs when both the inputs of JK latch are 1. If the width of the clock pulse positive is too long the state of the latch will keep on changing from 0 to 1, 1 to 0, 0 to 1 and so on, and at the end of the clock pulse, its state will be uncertain.

To avoid race around condition

1. T/2 < propagation delay of the circuit / gates.
2. Master – Slave
3. Edge triggered.

Edge Triggering

Sensitive to the pulse transition of the clock function.

1. Definition of clock pulse transition.

Positive Pulse Negative Pulse

Any change in the input at the enable clock at-high will not effect the output. Only when the input changes occur at the transition will effect the output. Until the next pulse transition comes the output will not change.

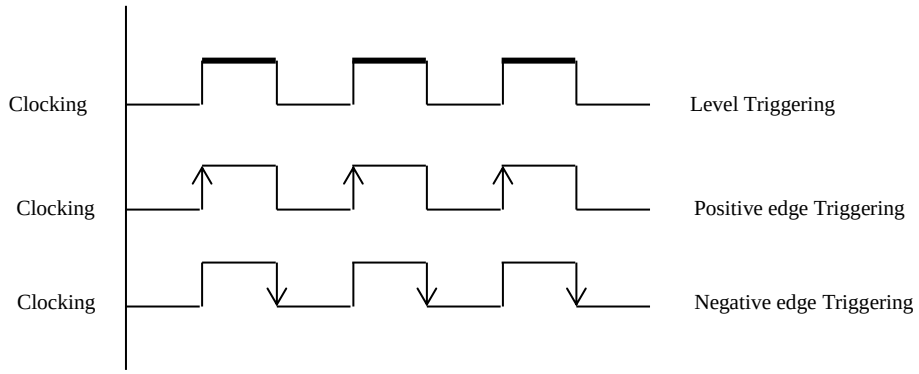

If the gated JK latch is made to toggle over one clock period then racing can be avoided. This introduced the concept of Master – Stave JK latch.

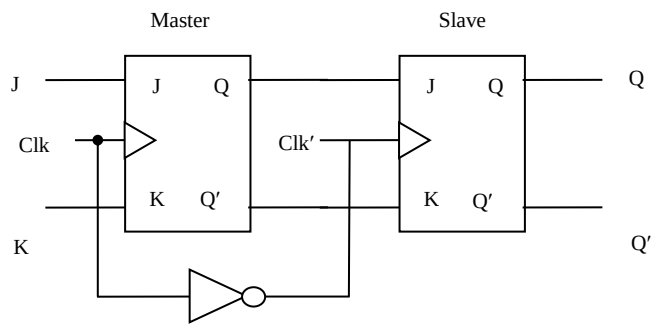

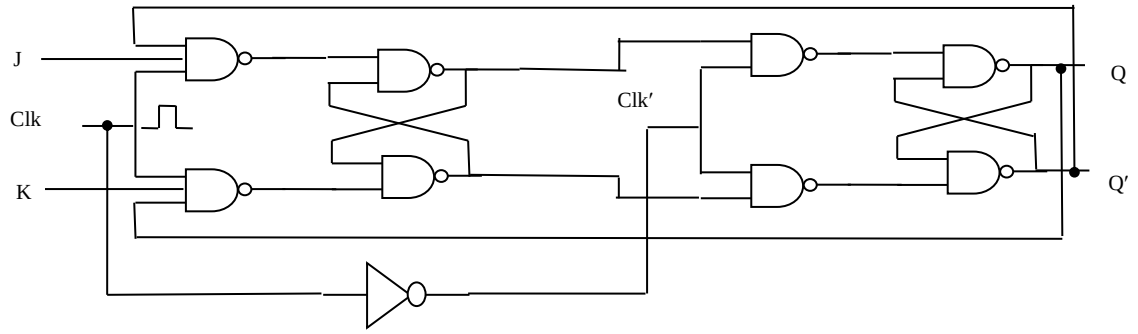

Drawbacks

Timing diagram of MS – JK latch

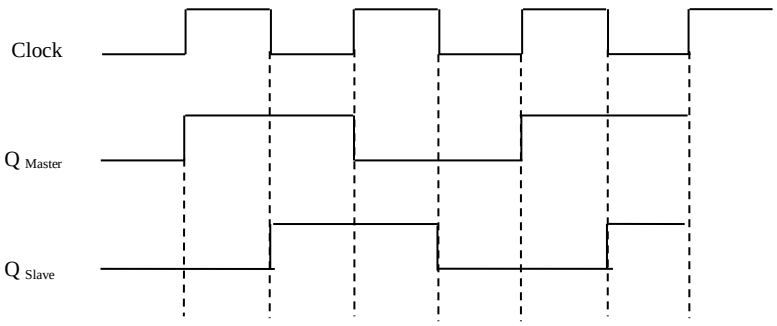

Features

1. When the clock pulse goes high the data at the J & K input are transmitted through the Master latch as normal. The adjoining Slave latch however remains isolated since its clock input; clock pulse is low logic “0” due to the inversion by the inverter.

2. When the initial clock pulse returns low to “0”, the Master becomes disabled and Slave now becomes enabled.

- Because of 2 set of latches (delay of FF) time period (tp) increases.
- Instability in togging states.
- Extra hardware causes extra cost.

Flip-Flops [Edge triggered]

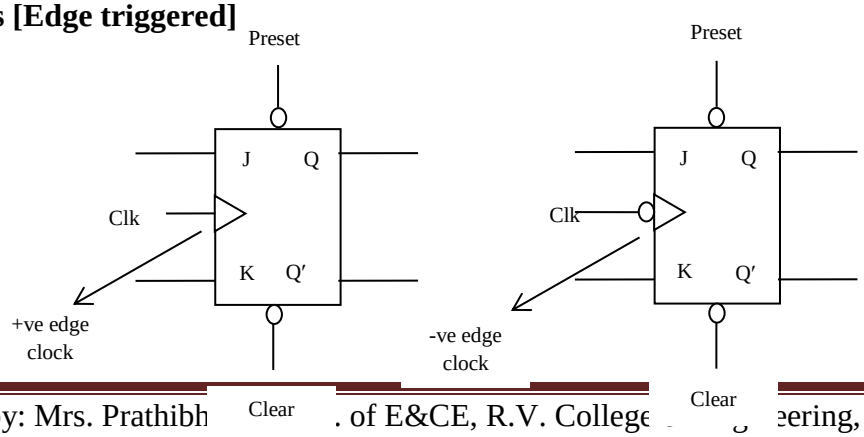

MS-JK Flip Flop

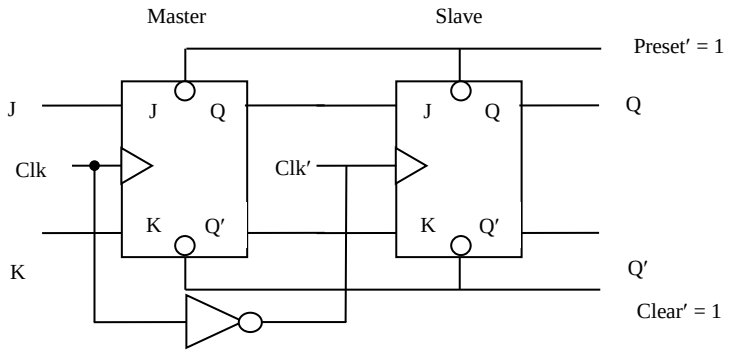

Asynchronous Inputs

Preset′	Clear′	Output
0	0	Invalid
0	1	1
1	0	0
1	1	Normal

Timing diagram shows the difference between level and edge triggering

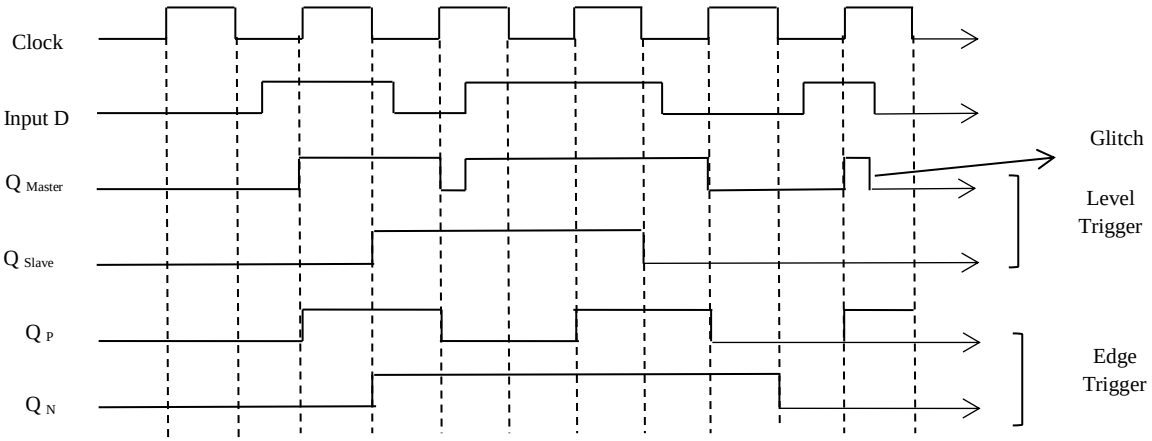

T – flip flop [Toggling flip flop]

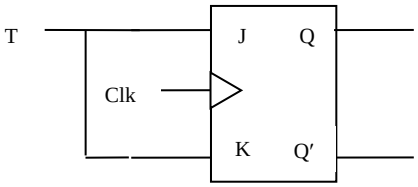

Function Table

T	Q	Q′
0	Memory	
1	Toggle	

J=1, K=1, $\Rightarrow$ T=1

T	Q	Q′
0	0	1
1	1	0
0	1	0
1	0	1

Transition Table

Q	T	Q_{n+1}
0	0	0
0	1	1
1	0	1
1	1	0

Exitation Table

Q	Q_{n+1}	T
0	0	0
0	1	1
1	0	1
1	1	0

Q \ T	0	1
0		1
1	1	

$\Rightarrow Q_{n+1} = TQ' + T'Q$

Positive triggered D flip flop

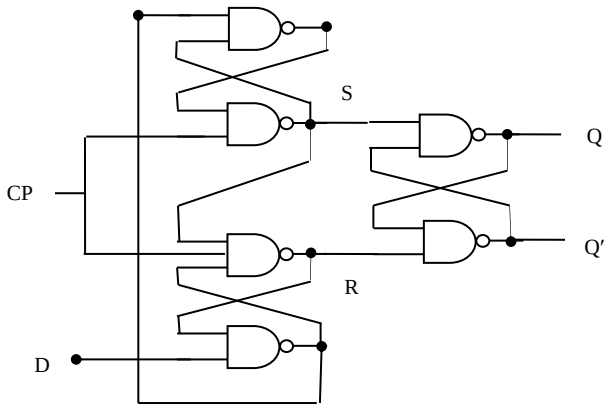

Clk	D	S	R	Q	Q′	
0	0	1	1	Memory		Hold
0	1	1	1	Memory		Hold
1	0	1	0	0	1	Reset
1	1	0	1	1	0	Set

When the input clock pulse makes a positive going transition, the value of D is transferred to Q changes in D when CP is maintained at a steady 1 value do not affect Q. Moreover, a negative pulse transition does not affect the output, nor does it when CP = 0. Hence the edge triggered flip-flop eliminates any feedback problems in sequential circuits just as a Master-Slave flip-flop does. The set up time & hold time must be taken into consideration.

Counters

A counter circuit is usually constructed of a number of flip-flops connected in cascade. Counters are a very widely used component in digital circuits, and are manufactured as separate integrated circuits and in corporated as a part of large integrated circuit.

Counters

Asynchronous
Changing state bits are used as clocks to subsequent state flip-flop

Synchronous
All state bits change under control of a single clock.

Asynchronous Counters / Ripple Counters

Divide by – 2 Circuit

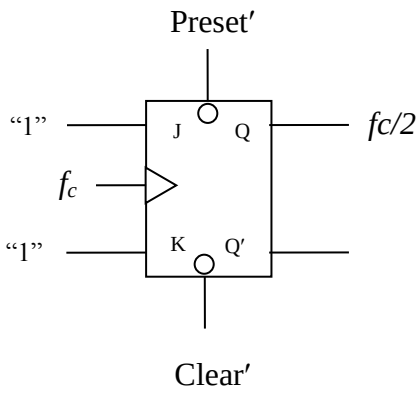

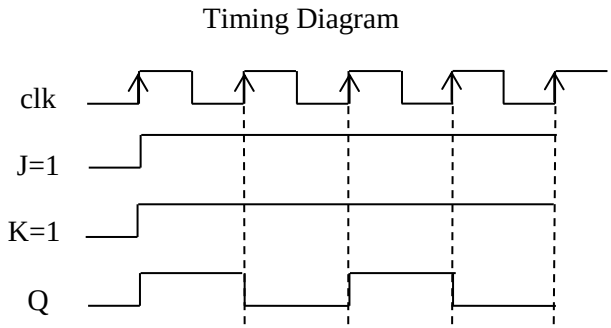

If you observe the output Q compare with the input clock signal, the output is exactly dividing the clock frequency by 2

Mod 2^n counter requires n-flip-flops.

3 Bit Asynchronous Counter (Up Counter)

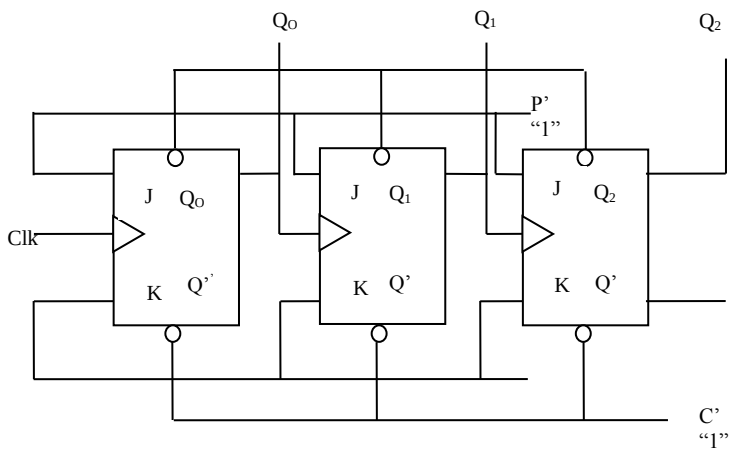

Truth Table

Q_0	Q_1	Q_2	Clk
0	0	0	0
0	0	1	1
0	1	0	2
0	1	1	3
1	0	0	4
1	0	1	5
1	1	0	6
1	1	1	7

3 Bit Asynchronous Counter (Down Counter)

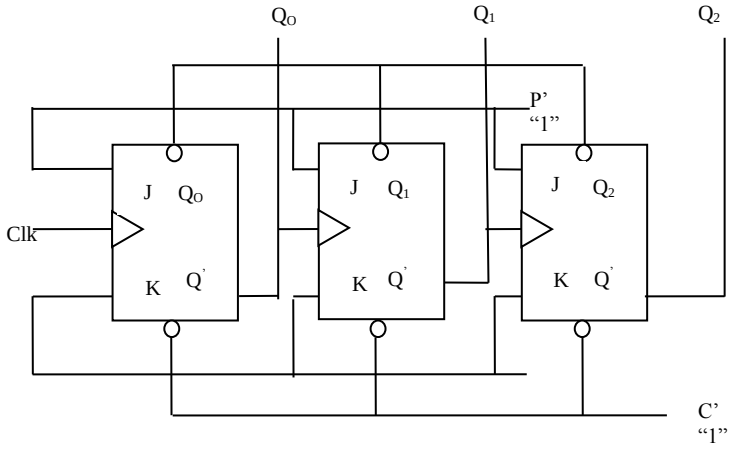

Truth Table

Q_0	Q_1	Q_2	Clk
1	1	1	0
1	1	0	1
1	0	1	2
1	0	0	3
0	1	1	4
0	1	0	5
0	0	1	6
0	0	0	7

Mod-10 Counter [7490 IC] BCD Counter

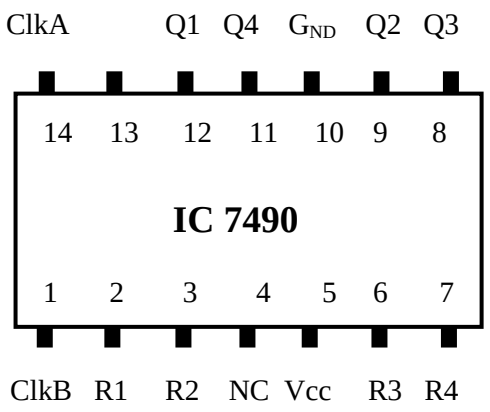

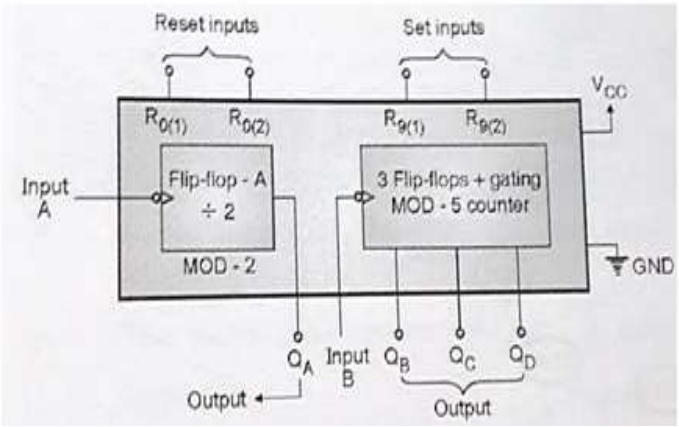

Mod 2 Counter followed by Mod 5 Counter

R_1 R_2 => High
R_3 R_4 => Low
] Reset to "0"

R_3 R_4 => High
R_1 R_2 => Low
] Set to Max. Count 1001

- The output of MOD–2 is externally connected to the input Clk B which is the Clk input of the internal MOD–5.
- Hence Q_A toggles on every falling edge of MOD-5 counter will increment from 000 to 100 on low going change of Q_A output.

Q_D	Q_C	Q_B	Q_A	Clk
0	0	0	0	0
0	0	0	1	1
0	0	1	0	2
0	0	1	1	3
0	1	0	0	4
0	1	0	1	5
0	1	1	0	6
0	1	1	1	7
1	0	0	0	8
1	0	0	1	9

Divide by -6 Counter using 7490

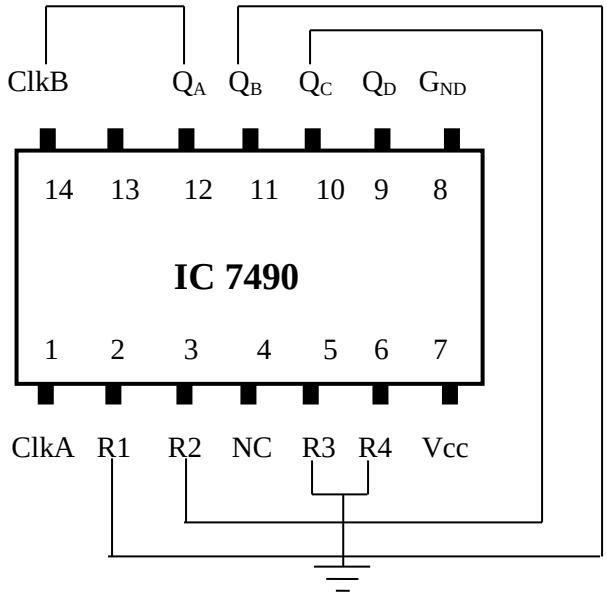

Q_D Q_C Q_B Q_A

1 0 0 1

Reset=> R_1, R_2 = 1] Rest to "0"

R_3, R_4 (Set)

Pre-settable UP/Down Counters [IC74192/93]

IC 74192 → Decade Counter [0 – 9]

IC 74193 → Binary Counter [0 – 15]

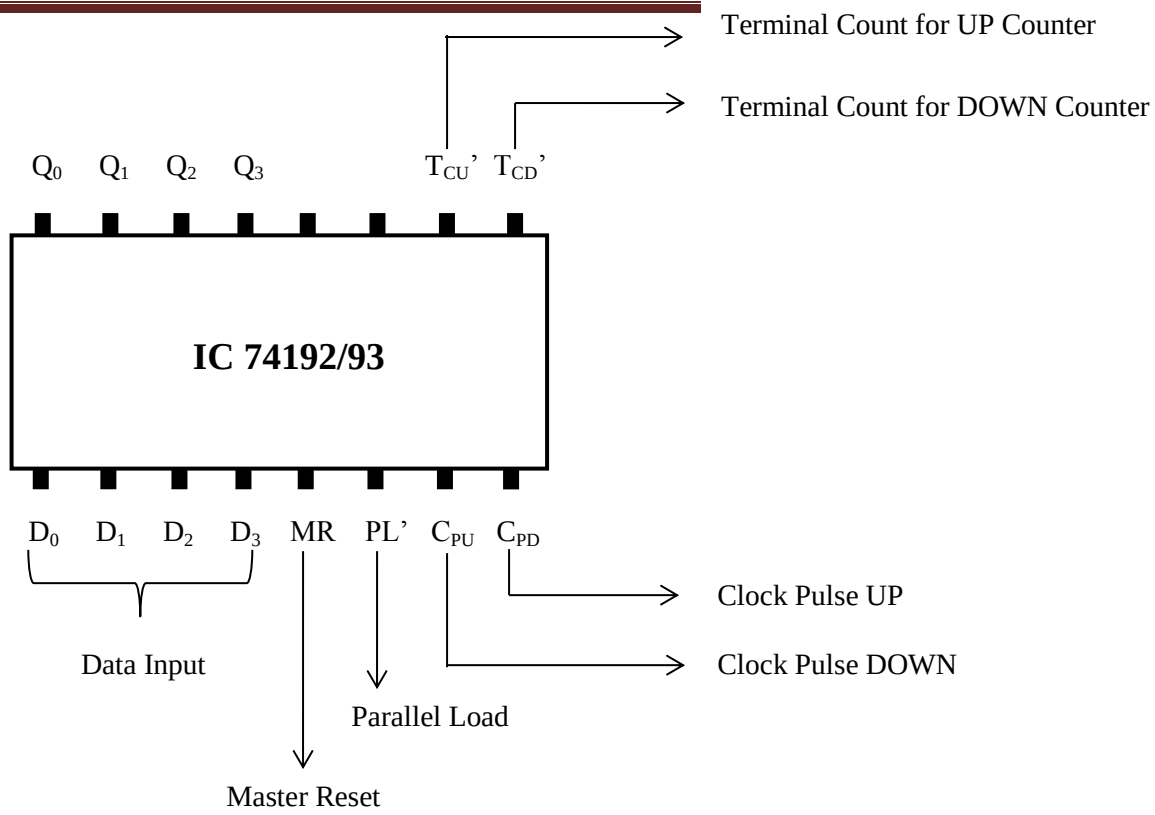

1. (3 – 6) Counter

Load 3 (0011) into D_0, D_1, D_2, D_3 and terminate at count 6.

C_{PU} → Clock

C_{PD} → '1'

MR → 0

PL' → 1

When counter is counting 0 to 8 the T_{CU}'= 1, when it reaches maximum count either 9 or 15 T_{CU}' = 0.

1. When, T_{CU}' = 0 load D_0, D_1, D_2, D_3 = 0011.

2.

Q_0	Q_1	Q_2	Q_3	
0	0	1	1	3
0	1	0	0	4
0	1	0	1	5
0	1	1	0	6
0	1	1	1	

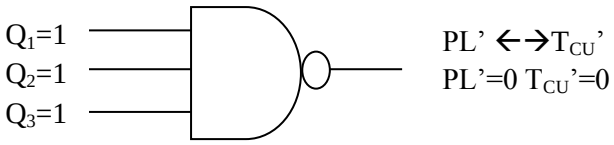

2. (6 – 3) Counter

Load 6 (0110) D_0, D_1, D_2, D_3 and terminate at count 3.

C_{PU} → Clock

C_{PD} → '1'

MR → 0

PL' → 1

When counter is counting 9 to 1 the T_{CD}' = 1, when it reaches minimum count 0 (both in 192/193) T_{CD}' = 0.

1. When T_{CD}' = 0, load D_0, D_1, D_2, D_3 = 0110.

2.

Q_0	Q_1	Q_2	Q_3	
0	1	1	0	6
0	1	0	1	5
0	1	0	0	4
0	0	1	1	3
0	0	1	0	2

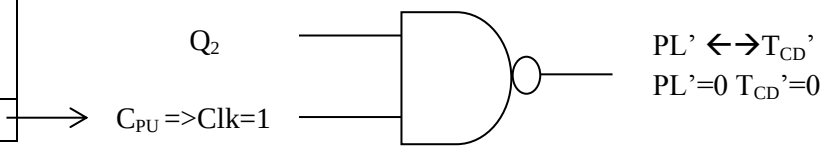

Synchronous Counter Design

3 Bit Synchronous UP Counter

State Diagram

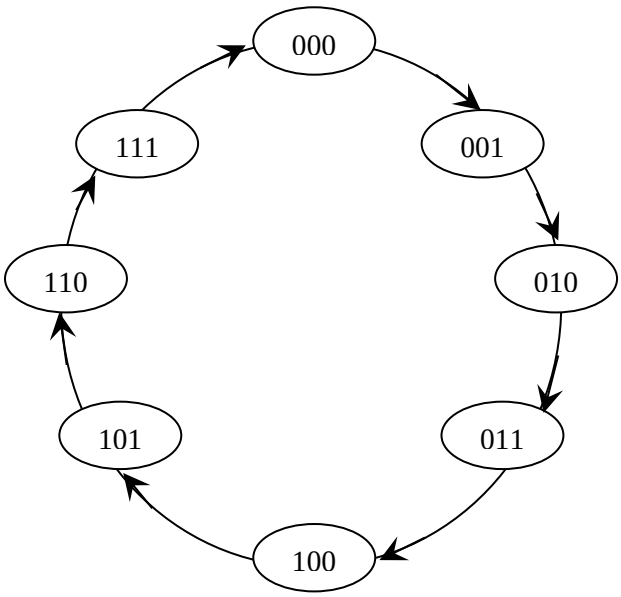

Present State			Next State			Present Input		
Q_2	Q_1	Q_0	Q_2	Q_1	Q_0	J_2K_2	J_1K_1	J_0K_0
0	0	0	0	0	1	0X	0X	1X
0	0	1	0	1	0	0X	1X	X1
0	1	0	0	1	1	0X	X0	1X
0	1	1	1	0	0	1X	X1	X1
1	0	0	1	0	1	X0	0X	1X
1	0	1	1	1	0	X0	1X	X1
1	1	0	1	1	1	X0	X0	1X
1	1	1	0	0	0	X1	X1	X1

No. of flip-flop's required => $2^N = 2^3$ = 3 flip-flop's using JK flip-flop.

Use K-Map to determine state equation

J_0 =>

Q_0 \ Q_1Q2	00	01	11	10
0	1	1	1	1
1	X	X	X	X

$J_0 = 1$

K_0 =>

Q_0 \ Q_1Q2	00	01	11	10
0	X	1	1	X
1	1	X	X	1

$K_0 = 1$

J_1 =>

Q_0 \ Q_1Q2	00	01	11	10
0	0	0	X	X
1	1	1	X	X

$J_1 = Q_0$

K_1 =>

Q_0 \ Q_1Q2	00	01	11	10
0	X	X	0	0
1	X	X	1	1

$K_1 = Q_0$

J_2 =>

Q_0 \ Q_1Q2	00	01	11	10
0	0	X	X	0
1	0	X	X	1

$J_2 = Q_0 Q_1$

K_2 =>

Q_0 \ Q_1Q2	00	01	11	10
0	X	0	0	X
1	X	0	1	X
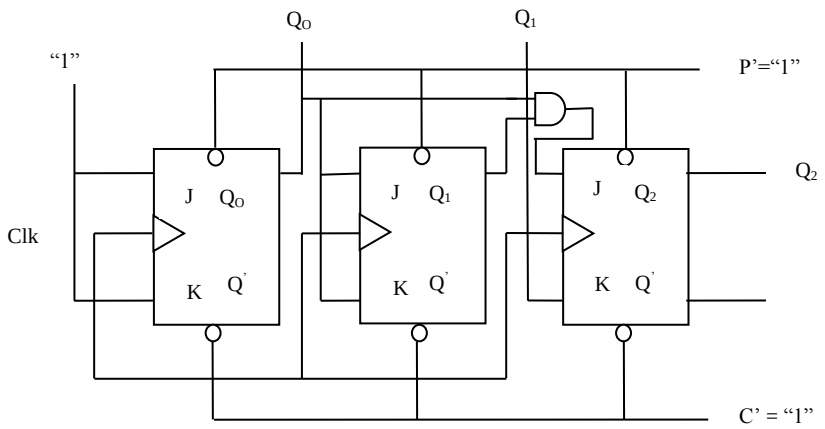
$K_2 = Q_0 Q_1$